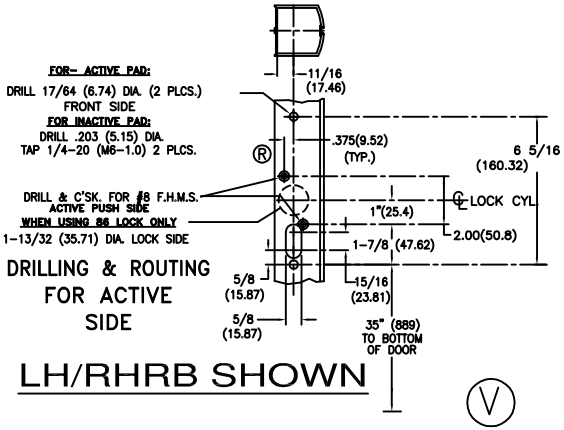

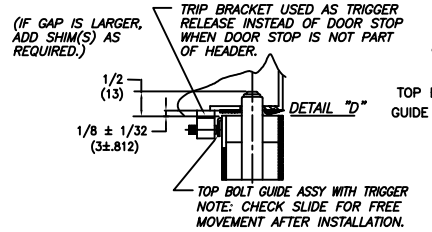

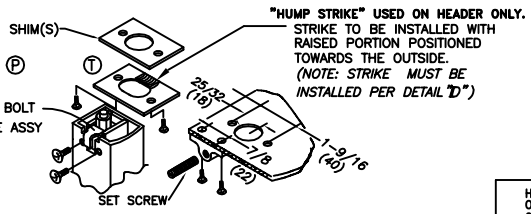

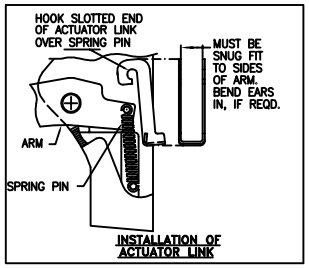

REQUIRED CYLINDER

1" MORTISE WITH CAM PROFILE AS SHOWN BELOW.

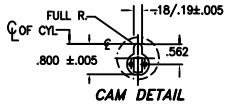

CAM DETAIL

MAKE OF CYLINDER	RECOMMENDED CAMS
YALE	YALE # 1161–L
CORBIN	MS–4800
RUSSWIN	MS–4800
SCHLAGE	SCHLAGE B–502–292
ILCO	4002–2R (LOCKWOOD)
ADAMS RITE	MS–1850
SARGENT	47–40–101

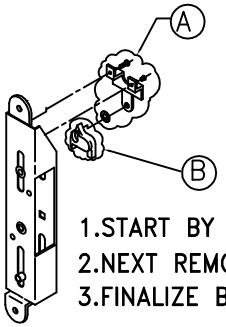

NOTE: WHEN NOT USING MORTISE CYLINDER, PROCEED WITH THE FOLLOWING:

1. START BY REMOVING BRACKET (A),
2. NEXT REMOVE DOGGING PAWL (B)
3. FINALIZE BY RE–ATTACHING BRACKET (A)

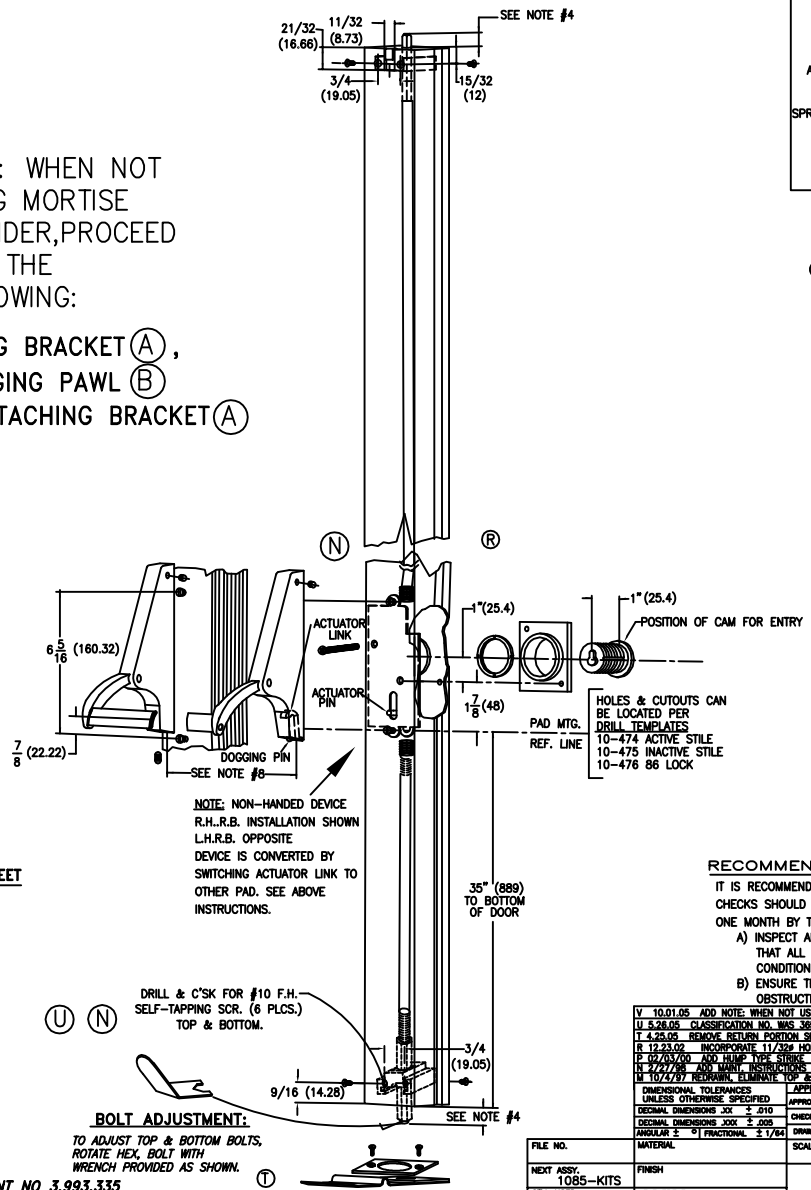

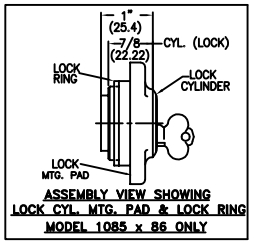

ASSEMBLY VIEW SHOWING LOCK CYL. MTG. PAD & LOCK RING MODEL 1085 x 86 ONLY

"THE SAFETY FEATURES OF THIS PRODUCT ARE ESSENTIAL TO IT'S COMPLIANCE WITH EN 1125. NO MODIFICATION OF ANY KIND, OTHER THAN THOSE DESCRIBED IN THESE INSTRUCTIONS, ARE PERMITTED".

MOUNTING INSTRUCTIONS

1. DETERMINE HAND OF DOOR, THEN PREPARE STILES PER TEMPLATES:
   10–474 DRILL TEMPLATE FOR ACTIVE STILE.
   10–475 DRILL TEMPLATE FOR INACTIVE STILE.
2. IF LOCK IS TO BE USED, PREPARE ACTIVE STILE PER TEMPLATE 10–476.
3. INSTALL ROD & CASE ASSY INTO ACTIVE STILE AND SECURE WITH TWO 1/4–20 (M6–1.0) SHOULDER STUDS. (IF USING LOCK, PERFORM INST. 5 & 6 NEXT.)
4. PLACE ACTIVE PAD OF STILE MAKING CERTAIN THAT ACTUATOR LINK IS PROPERLY ENGAGED (UNDERSIDE OF PIN) TO MECHANISM AND SECURE PAD. ADJUST BOLTS BY SCREWING IN OR OUT TILL TOP OF BOLT IS FLUSH WITH EDGE OF DOOR, WHEN THE PUSH BAR IS FULLY DEPRESSED. THEN INSTALL BOLT GUIDES WITH SIX #10 x 1/2 F.H. SELF TAPPING SCREWS.
5. INSERT LOCK CYLINDER INTO LOCK MOUNTING PAD AND SECURE WITH LOCK RING PROVIDED. MAKE SURE CYLINDER AND LOCK MOUNTING PAD ARE INSTALLED AS SHOWN. SECURE WITH 2 EA. 8–32 x 1–15/16 FHMS.

R

7. DRILL .203 (5.15) DIA. AND TAP 1/4–20 (M6–1.0) THD. (2 PLCS.) ON INACTIVE STILE AND INSTALL TWO 1/4–20 (M6–1.0) SHOULDER STUDS. MOUNT INACTIVE PAD TO STILE WITH THREE 1/4–20 (M6–1.0) SOC. SET SCREWS.
8. CUT LENGTH OF PANIC BAR BY MEASURING FROM INSIDE TO INSIDE EDGE OF MOUNTING PADS. CAUTION: BAR MUST BE CUT TO EXACT LENGTH WITHIN ±1/32 (±.787) TO WORK PROPERLY.
9. LOOSEN INACTIVE PAD, INSTALL AND SECURE PANIC BAR WITH TWO 1/4–20 (M6–1.0) x 1"(25.4) OVAL HD. M.S. (PHIL.)

DOGGING OF DEVICE WITH CYLINDER KEY

TO DOG DEVICE INSERT KEY, FULL DEPRESS PANIC BAR, HOLD DOWN & TURN KEY CLOCKWISE TO APPROX. TWO O' CLOCK. RETURN KEY TO CENTER FOR REMOVAL.

TO UNDOG TURN KEY COUNTERCLOCKWISE.

DOGGING DEVICE WITH DOGGING PIN

PUSH PANIC BAR DOWN AND HOLD. PUSH DOGGING PIN UP WITH SCREW DRIVER AND TURN 90° TO 180° EITHER DIRECTION, UNTIL DOGGING PIN RELEASES.

NOTE:
THIS PRODUCT IS DESIGNED AND MFRG. TO MEET CLASSIFICATION NO. 37601321A, EN1125 STANDARD.

BOLT ADJUSTMENT:

TO ADJUST TOP & BOTTOM BOLTS, ROTATE HEX. BOLT WITH WRENCH PROVIDED AS SHOWN.

PATENT NO 3,993,335

RECOMMENDATIONS FOR MAINTENANCE:

IT IS RECOMMENDED THAT THE FOLLOWING ROUTINE MAINTENANCE CHECKS SHOULD BE TAKEN AT INTERVALS OF NOT MORE THAN ONE MONTH BY THE OCCUPIER OR HIS APPROVED REPRESENTATIVE:

A) INSPECT AND OPERATE THE PANIC DEVICE TO ENSURE THAT ALL COMPONENTS ARE IN A SATISFACTORY WORKING CONDITION;

B) ENSURE THAT THE KEEPER(S) IS (ARE) FREE FROM OBSTRUCTION.

V 10.01.05 ADD NOTE: WHEN NOT USING MORTISE CYLINDER:		ECN1863	RM
U 5.26.05 CLASSIFICATION NO. WAS 36501321A	ECN1841		RM
T 4.25.05 REMOVE RETURN PORTION SHOWN ON TOP STRIKE		ECN1834	RM
R 12.23.02 INCORPORATE 11/32# HOLE FOR LOCK PAD		ECN1644	RM
P 02/03/00 ADD HUMP TYPE STRIKE	ECN1339		RM
N 2/27/98 ADD MAINT. INSTRUCTIONS ECN1143			RM
M 10/4/97 REDRAWN, ELIMINATE TOP & BTM HOLE FOR ADJUSTMENT (BOLT GUIDE) ECN1108			RM

DIMENSIONAL TOLERANCES UNLESS OTHERWISE SPECIFIED	APPROVALS	DATE
DECIMAL DIMENSIONS .XX ± .010	APPROVED	
DECIMAL DIMENSIONS .XXX ± .005	CHECKED	
ANGULAR ± ° FRACTIONAL ± 1/64	DRAWN RM	7/7/97

jackson CORPORATION
3447 UNION PACIFIC AVE.
LOS ANGELES, CALIF. 90023

FILE NO.	MATERIAL	SCALE NONE	INSTALLATION GUIDE 1085 & 1085x86 PANIC DEVICES
NEXT ASSY. 1085–KITS	FINISH		SHEET 1 OF 1 SHEETS
QTY. USED 1	HEAT TREAT		DWG. NO. 10–473 REV. V

RELEASE FOR PRODUCTION	DATE

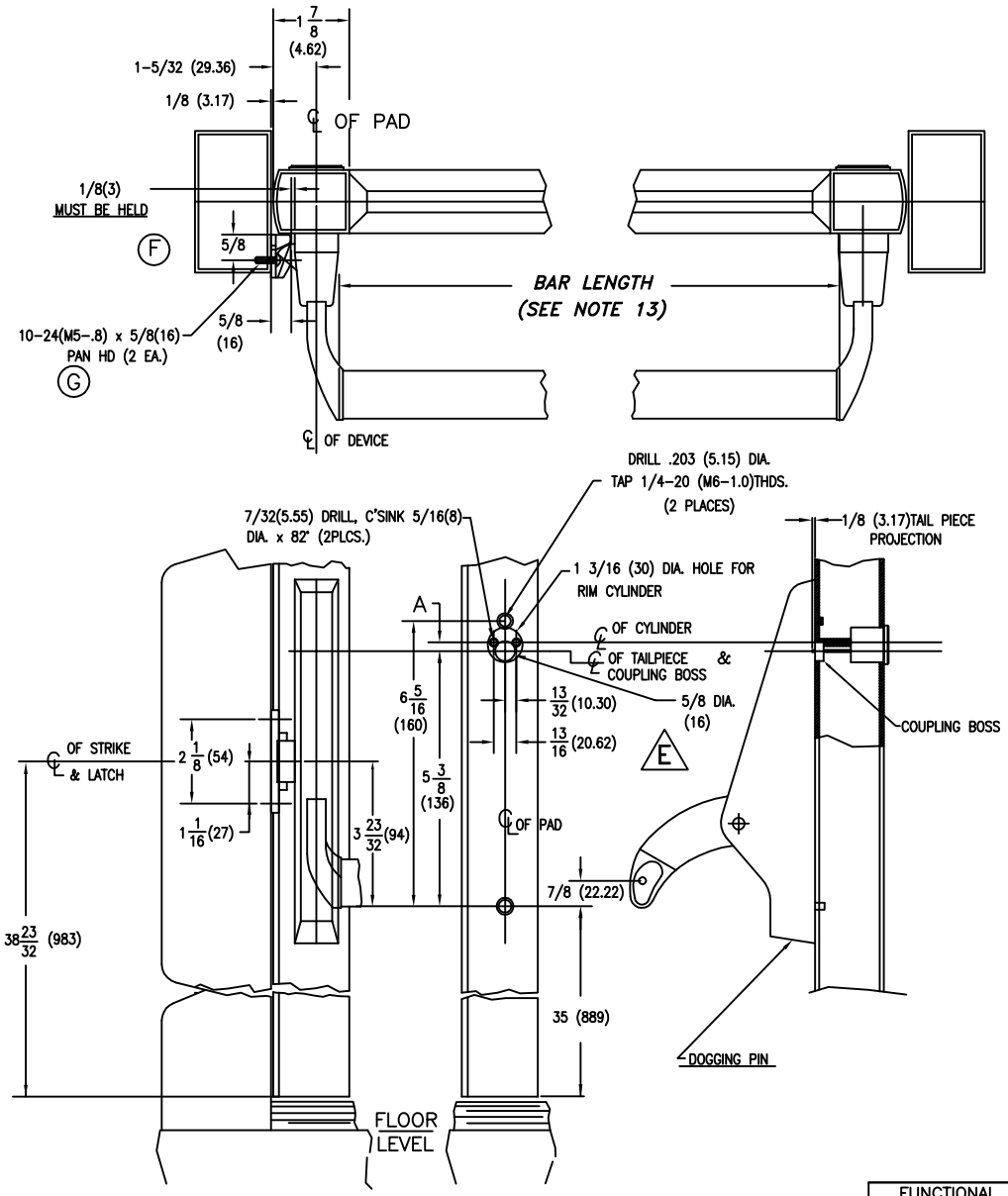

MOUNTING INSTRUCTIONS

1. DETERMINE HAND OF DOOR AND ESTABLISH CENTER LINE OF PADS ON STILES.
2. PREPARE STILES PER TEMPLATES:
   10-484 TEMPLATE FOR ACTIVE STILE.
   10-475 TEMPLATE FOR INACTIVE STILE.
3. DRILL CYLINDER MOUNTING HOLES ONLY IF REQUIRED
4. LOCATE CENTER LINE OF CYLINDER ON EXTERIOR SIDE OF ACTIVE STILE AND DRILL IF REQUIRED.
5. TRIM TAIL PIECE TO FIT AS SHOWN.
6. MOUNT CYLINDER IN PLACE AND SECURE WITH MOUNTING SCREWS. *(SCREWS MUST BE FLUSH WITH DOOR.)*
7. DETERMINE FUNCTION DESIRED:
   A.) REGULAR FUNCTION KEY REMOVABLE IN EITHER LOCKED OR UNLOCKED POSITION. FULLY RELEASE LATCH THEN SET INDEX MARK ON COUPLING BOSS STRAIGHT UP.
   B.) NIGHT LATCH FUNCTION: KEY REMOVABLE IN LOCKED POSITION ONLY. PREFORM STEP 'A' THEN ROTATE' COUPLING BOSS 90° TOWARDS HINGE SIDE.
8. DRILL .203 (5.16)DIA. AND TAP 1/4-20(M6-1.0) THD (4 PLCS.) ON ACTIVE AND INACTIVE STILES.
   & INSTALL FOUR (4) 1/4-20 SHOULDER STUDS. MOUNT ACTIVE PAD TO STILE WITH THREE 1/4-20(M6-1.0) x 1/2(12.7) SOC. SET SCREWS.
9. LOCATE AND DRILL MOUNTING HOLES FOR ADJUSTABLE STRIKE. (CENTER ON LATCH)
10. MOUNT AND SECURE STRIKE AS SHOWN.
11. CHECK OPERATION TO ASSURE THAT ALL PARTS AND CYLINDER ARE FUNCTIONING PROPERLY. ADJUST AS REQUIRED.
12. MOUNT INACTIVE PAD TO STILE WITH THREE (3) 1/4-20(M6-1.0) x 1/2 (12.7) SOC. SET SCREWS.
13. CUT LENGTH OF PANIC BAR BY MEASURING FROM INSIDE TO INSIDE EDGE OF MOUNTING PADS. 1/32 (.79) FIT TO SIZE.
14. LOOSEN INACTIVE PAD. INSTALL AND SECURE PANIC BAR WITH TWO 1/4-20(M6-1.0) x1(25.4) OVAL HD.M.S. (PHIL.) RETIGHTEN PAD SET SCREWS.

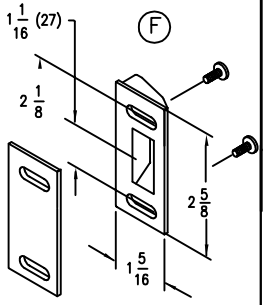

"C" STRIKE

DOGGING INSTRUCTIONS:

TO DOG- DEPRESS CROSS BAR TURN KEY TOWARD LOCK SIDE OR PUSH DOGGING

TO UNDOG- DEPRESS CROSS BAR TURN KEY TOWARD LOCK SIDE OR ROTATE DOGGING PIN UNTIL IT RELEASES.

FUNCTIONAL CYLINDERS	DIM. A
ILCO	1/4 (6.35)
LOCKWOOD	
YALE	
CORBIN	
SCHLAGE	
RUSSWIN	
WELCH	
KEIL	
SARGENT	3/8 (9.52)

G 1.28.08	PAN HEAD WAS OVAL	ECN1999	RM
F 6.27.03	INCORPORATE SINTERED ROLLER-LESS "C" STRIKE	ECN1625	RM
E 5/16/89	5/8 WAS 19/32		RM

DIMENSIONAL TOLERANCES UNLESS OTHERWISE SPECIFIED	APPROVALS	DATE
DECIMAL DIMENSIONS .XX ± .010	APPROVED	
DECIMAL DIMENSIONS .XXX ± .005	CHECKED	
ANGULAR ± X° FRACTIONAL ± 1/64	DRAWN RM	6/28/97

jackson CORPORATION
3447 UNION PACIFIC AVE. LOS ANGELES, CALIF. 90023

FILE NO.	MATERIAL	SCALE NONE
NEXT ASSY. 1095-KITS	FINISH	INSTALLATION GUIDE 1095 RIM PANIC DEVICE FOR CENTER HUNG NARROW STILE
QTY. USED 1	HEAT TREAT	

SHEET 1 OF 1 SHEETS
DWG. NO. 10-480 REV. G

RELEASE FOR PRODUCTION	DATE

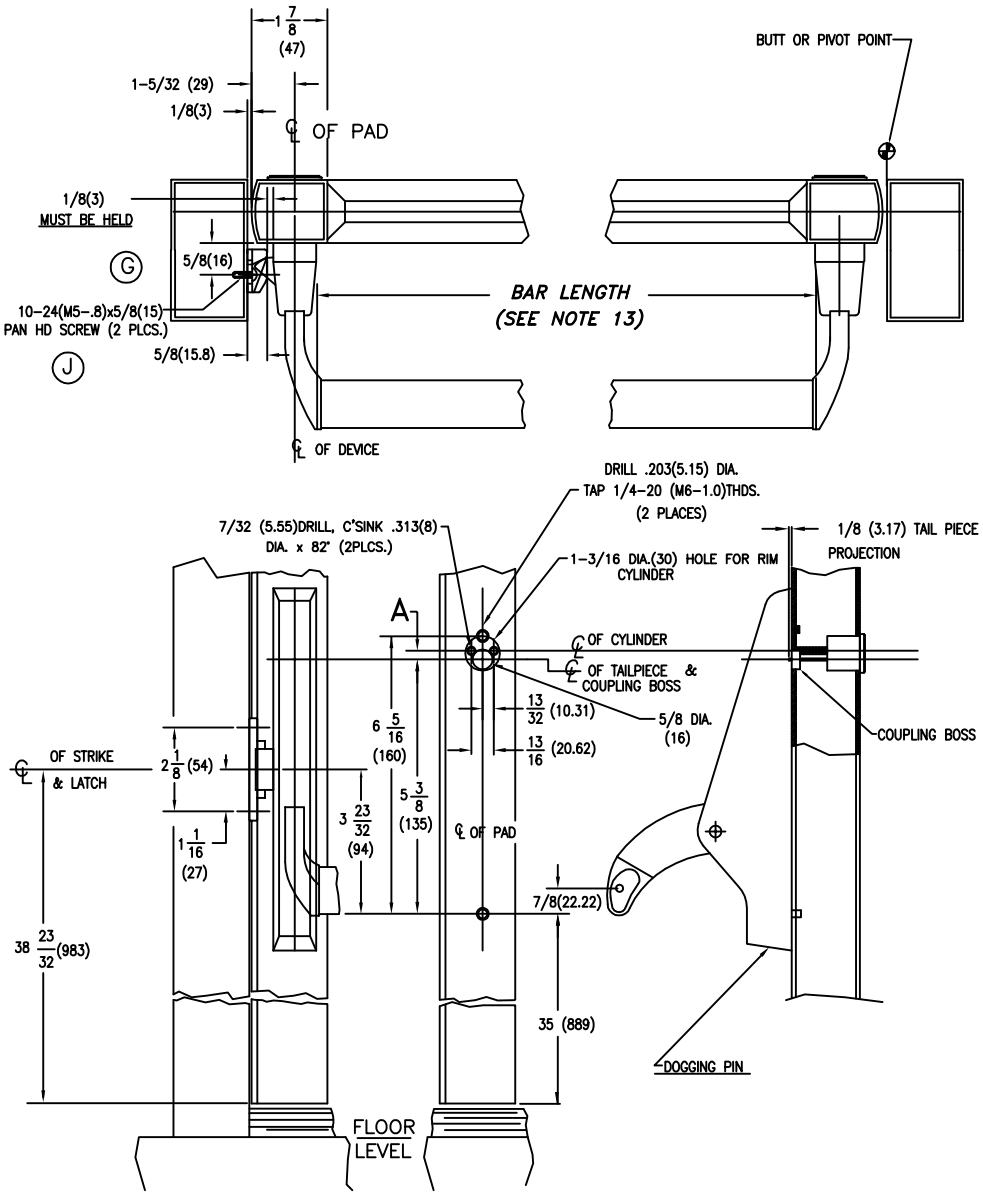

MOUNTING INSTRUCTIONS

1. DETERMINE HAND OF DOOR AND ESTABLISH CENTER LINE OF PADS ON STILES.
2. PREPARE STILES PER TEMPLATES:
   10-484 TEMPLATE FOR ACTIVE STILE.
   10-475 TEMPLATE FOR INACTIVE STILE.
3. DRILL CYLINDER MOUNTING HOLES ONLY IF REQUIRED
4. LOCATE CENTER LINE OF CYLINDER ON EXTERIOR SIDE OF ACTIVE STILE AND DRILL IF REQUIRED.
5. TRIM TAIL PIECE TO FIT AS SHOWN.
6. MOUNT CYLINDER IN PLACE AND SECURE WITH MOUNTING SCREWS. *(SCREWS MUST BE FLUSH WITH DOOR.)*
7. DETERMINE FUNCTION DESIRED:
   A.) REGULAR FUNCTION KEY REMOVABLE IN EITHER LOCKED OR UNLOCKED POSITION. FULLY RELEASE LATCH THEN SET INDEX MARK ON COUPLING BOSS STRAIGHT UP.
   B.) NIGHT LATCH FUNCTION: KEY REMOVABLE IN LOCKED POSITION ONLY. PREFORM STEP 'A' THEN ROTATE' COUPLING BOSS 90° TOWARDS HINGE SIDE.
8. DRILL .203 (5.15)DIA. AND TAP 1/4-20 THD (4 PLCS.) ON ACTIVE & INACTIVE STILES & INSTALL FOUR (4) 1/4-20(M6-1.0) SHOULDER STUDS. MOUNT ACTIVE PAD TO STILE WITH THREE 1/4-20(M6-1.0)x1/2(12.7) SOC. SET SCREWS.
9. LOCATE AND DRILL MOUNTING HOLES FOR ADJUSTABLE STRIKE. (CENTER ON LATCH)
10. MOUNT AND SECURE STRIKE AS SHOWN.
11. CHECK OPERATION TO ASSURE THAT ALL PARTS AND CYLINDER ARE FUNCTIONING PROPERLY. ADJUST AS REQUIRED.
12. MOUNT INACTIVE PAD TO STILE WITH THREE (3) 1/4-20 (M6-1.0)x 1/2(12.7) SOC. SET SCREWS.
13. CUT LENGTH OF PANIC BAR BY MEASURING FROM INSIDE TO INSIDE EDGE OF MOUNTING PADS. 1/32± (.79) FIT TO SIZE.
14. LOOSEN INACTIVE PAD. INSTALL AND SECURE PANIC BAR WITH TWO 1/4-20(M6-1.0) x 1(25.4) OVAL HD.M.S. (PHIL.) RETIGHTEN PAD SET SCREWS.

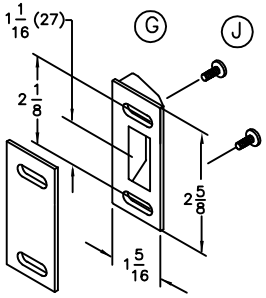

"C" STRIKE

DOGGING INSTRUCTIONS:

H TO DOG- DEPRESS CROSS BAR TURN KEY TOWARD HINGE SIDE OR PUSH DOGGING PIN UP AND TURN 90° EITHER DIRECTION.
TO UNDOG- DEPRESS CROSS BAR TURN KEY TOWARD LOCK SIDE OR ROTATE DOGGING PIN UNTIL IT RELEASES.

FUNCTIONAL CYLINDERS	DIM.
ILCO	1/4(6.35)
LOCKWOOD	
YALE	
CORBIN	
SCHLAGE	
RUSSWIN	
WELCH	
KEIL	
SARGENT	3/8(9.52)

J	1.28.08	PAN HEAD WAS OVAL	ECN1999 RM
H	6.20.05	REVISE "DOGGING INSTRUCTIONS" HINGE WAS LOCK	ECN1846 RM
G	6.26.03	INCORPORATE CENTERED "C" STRIKE	ECN1625 RM
F	6/11/98	R E D R A W N	ECN1143 RM

DIMENSIONAL TOLERANCES UNLESS OTHERWISE SPECIFIED	APPROVALS	DATE
DECIMAL DIMENSIONS .XX ± .010	APPROVED	
DECIMAL DIMENSIONS .XXX ± .005	CHECKED	
ANGULAR ± X° | FRACTIONAL ± 1/64	DRAWN RM	6/28/97
FILE NO.	MATERIAL	SCALE NONE
NEXT ASSY. 1095-KITS	FINISH	INSTALLATION GUIDE 1095 RIM PANIC DEVICE FOR OFFSET PIVOT OR BUTT HINGE
QTY. USED 1	HEAT TREAT	

jackson CORPORATION
3447 UNION PACIFIC AVE.
LOS ANGELES, CALIF. 90023

SHEET 1 OF 1 SHEETS
DWG. NO. 10-481 REV. J

RELEASE FOR PRODUCTION	DATE

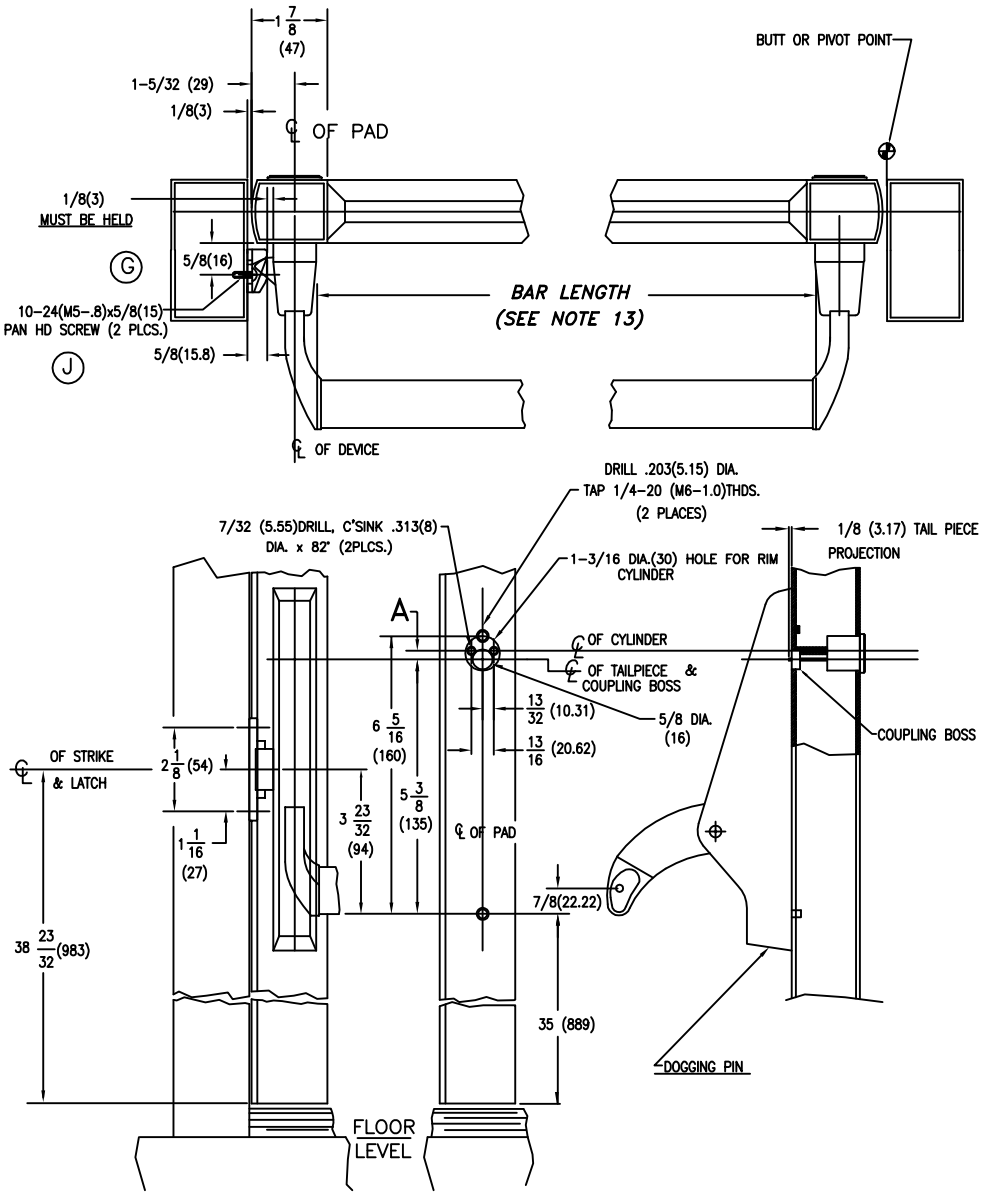

MOUNTING INSTRUCTIONS

1. DETERMINE HAND OF DOOR AND ESTABLISH CENTER LINE OF PADS ON STILES.
2. PREPARE STILES PER TEMPLATES:
   10-484 TEMPLATE FOR ACTIVE STILE.
   10-475 TEMPLATE FOR INACTIVE STILE.
3. DRILL CYLINDER MOUNTING HOLES ONLY IF REQUIRED
4. LOCATE CENTER LINE OF CYLINDER ON EXTERIOR SIDE OF ACTIVE STILE AND DRILL IF REQUIRED.
5. TRIM TAIL PIECE TO FIT AS SHOWN.
6. MOUNT CYLINDER IN PLACE AND SECURE WITH MOUNTING SCREWS. *(SCREWS MUST BE FLUSH WITH DOOR.)*
7. DETERMINE FUNCTION DESIRED:
   A.) REGULAR FUNCTION KEY REMOVABLE IN EITHER LOCKED OR UNLOCKED POSITION. FULLY RELEASE LATCH THEN SET INDEX MARK ON COUPLING BOSS STRAIGHT UP.
   B.) NIGHT LATCH FUNCTION: KEY REMOVABLE IN LOCKED POSITION ONLY. PREFORM STEP 'A' THEN ROTATE' COUPLING BOSS 90° TOWARDS HINGE SIDE.
8. DRILL .203 (5.15)DIA. AND TAP 1/4-20 THD (4 PLCS.) ON ACTIVE & INACTIVE STILES & INSTALL FOUR (4) 1/4-20(M6-1.0) SHOULDER STUDS. MOUNT ACTIVE PAD TO STILE WITH THREE 1/4-20(M6-1.0)x1/2(12.7) SOC. SET SCREWS.
9. LOCATE AND DRILL MOUNTING HOLES FOR ADJUSTABLE STRIKE. (CENTER ON LATCH)
10. MOUNT AND SECURE STRIKE AS SHOWN.
11. CHECK OPERATION TO ASSURE THAT ALL PARTS AND CYLINDER ARE FUNCTIONING PROPERLY. ADJUST AS REQUIRED.
12. MOUNT INACTIVE PAD TO STILE WITH THREE (3) 1/4-20 (M6-1.0)x 1/2(12.7) SOC. SET SCREWS.
13. CUT LENGTH OF PANIC BAR BY MEASURING FROM INSIDE TO INSIDE EDGE OF MOUNTING PADS. 1/32± (.79) FIT TO SIZE.
14. LOOSEN INACTIVE PAD. INSTALL AND SECURE PANIC BAR WITH TWO 1/4-20(M6-1.0) x 1(25.4) OVAL HD.M.S. (PHIL.) RETIGHTEN PAD SET SCREWS.

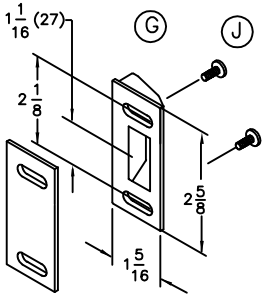

"C" STRIKE

DOGGING INSTRUCTIONS:

H TO DOG- DEPRESS CROSS BAR TURN KEY TOWARD HINGE SIDE OR PUSH DOGGING PIN UP AND TURN 90° EITHER DIRECTION.
TO UNDOG- DEPRESS CROSS BAR TURN KEY TOWARD LOCK SIDE OR ROTATE DOGGING PIN UNTIL IT RELEASES.

FUNCTIONAL CYLINDERS	DIM.
ILCO	1/4(6.35)
LOCKWOOD	
YALE	
CORBIN	
SCHLAGE	
RUSSWIN	
WELCH	
KEIL	
SARGENT	3/8(9.52)

J	1.28.08	PAN HEAD WAS OVAL	ECN1999 RM
H	6.20.05	REVISE "DOGGING INSTRUCTIONS" HINGE WAS LOCK	ECN1846 RM
G	6.26.03	INCORPORATE CENTERED "C" STRIKE	ECN1625 RM
F	6/11/98	R E D R A W N	ECN1143 RM

DIMENSIONAL TOLERANCES UNLESS OTHERWISE SPECIFIED	APPROVALS	DATE
DECIMAL DIMENSIONS .XX ± .010	APPROVED	
DECIMAL DIMENSIONS .XXX ± .005	CHECKED	
ANGULAR ± X° | FRACTIONAL ± 1/64	DRAWN RM	6/28/97
FILE NO.	MATERIAL	SCALE NONE
NEXT ASSY. 1095-KITS	FINISH	INSTALLATION GUIDE 1095 RIM PANIC DEVICE FOR OFFSET PIVOT OR BUTT HINGE
QTY. USED 1	HEAT TREAT	

jackson CORPORATION
3447 UNION PACIFIC AVE.
LOS ANGELES, CALIF. 90023

SHEET 1 OF 1 SHEETS
DWG. NO. 10-481 REV. J

RELEASE FOR PRODUCTION	DATE

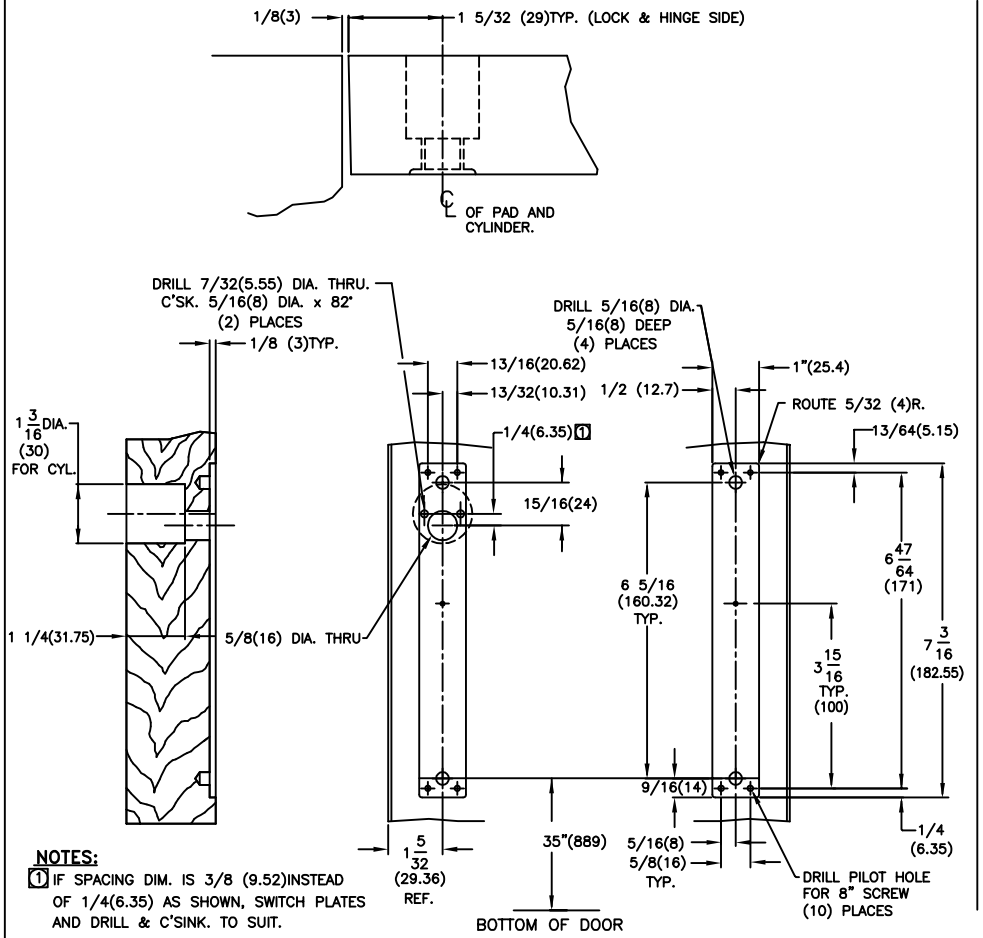

NOTES:

1. IF SPACING DIM. IS 3/8 (9.52)INSTEAD OF 1/4(6.35) AS SHOWN, SWITCH PLATES AND DRILL & C'SINK. TO SUIT.

ACTIVE SIDE ROUTING
FOR PLATE #30-886

INACTIVE SIDE ROUTING
FOR PLATE #30-884

PACKAGE NO. 30-894

1095 WOOD APPLICATION

ROUTING OF WOOD DOOR FOR SUPPORT PLATES

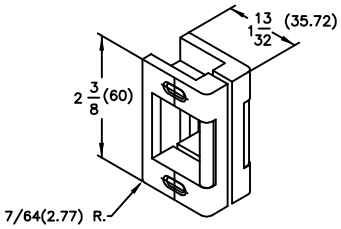

TYPE "P" ADJUSTABLE STRIKE

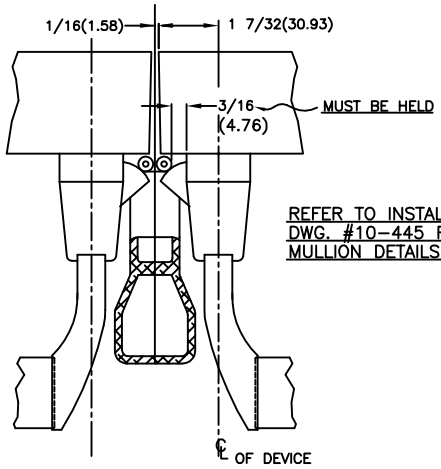

REFER TO INSTALLATION. DWG. #10-445 FOR MULLION DETAILS.

L.H.R.B. SHOWN
R.H.R.B. OPPOSITE

F	3/14/98	REDRAWN	ECN1143	RM

DIMENSIONAL TOLERANCES UNLESS OTHERWISE SPECIFIED	APPROVALS	DATE
DECIMAL DIMENSIONS .XX ± .010	APPROVED	
DECIMAL DIMENSIONS .XXX ± .005	CHECKED	
ANGULAR ± ° FRACTIONAL ± 1/64	DRAWN RM	7/7/97

jackson CORPORATION®
3447 UNION PACIFIC AVE.
LOS ANGELES, CALIF. 90023

FILE NO.	MATERIAL	SCALE NONE	
NEXT ASSY.	FINISH	1095 xWOOD APPLICATION	SHEET 1 OF 1 SHEETS
QTY. USED 1	HEAT TREAT		DWG. NO. 10-482 REV. F

RELEASE FOR PRODUCTION	DATE

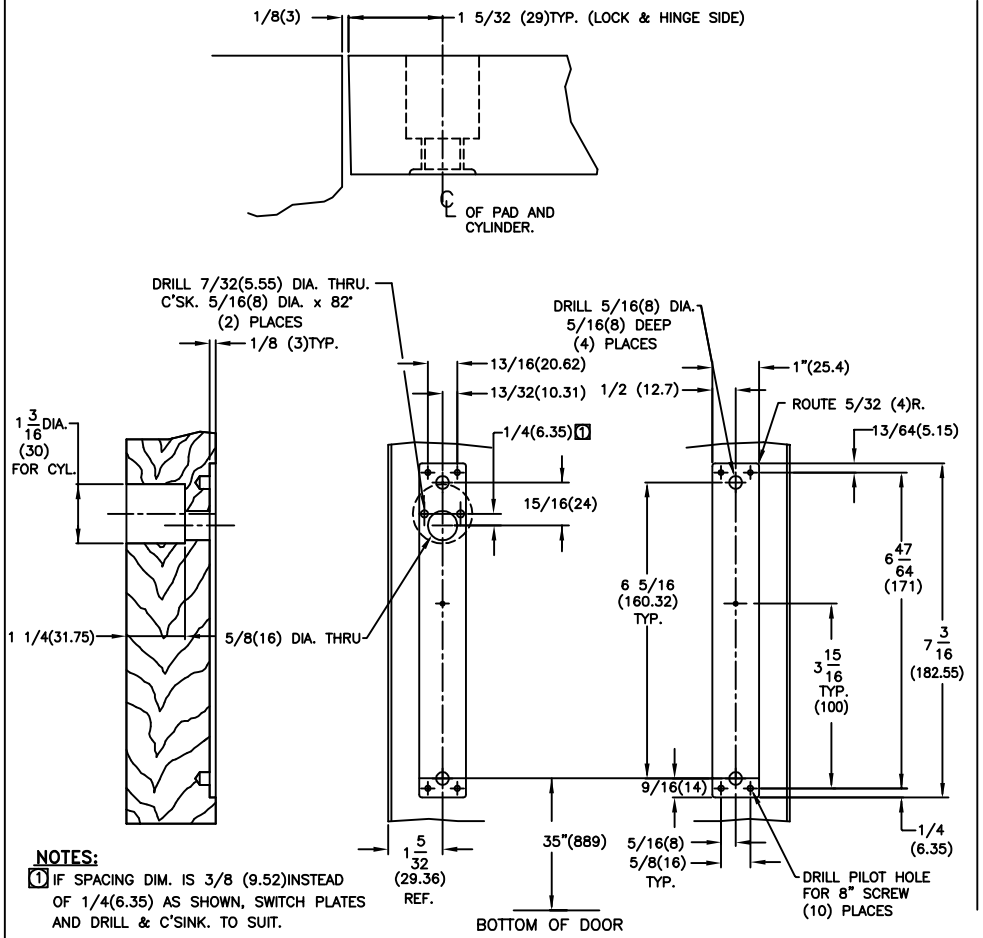

NOTES:

1. IF SPACING DIM. IS 3/8 (9.52)INSTEAD OF 1/4(6.35) AS SHOWN, SWITCH PLATES AND DRILL & C'SINK. TO SUIT.

ACTIVE SIDE ROUTING
FOR PLATE #30-886

INACTIVE SIDE ROUTING
FOR PLATE #30-884

PACKAGE NO. 30-894

1095 WOOD APPLICATION

ROUTING OF WOOD DOOR FOR SUPPORT PLATES

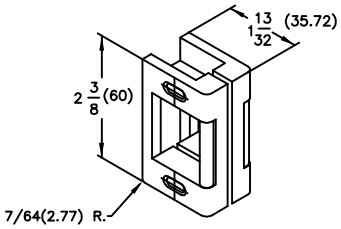

TYPE "P" ADJUSTABLE STRIKE

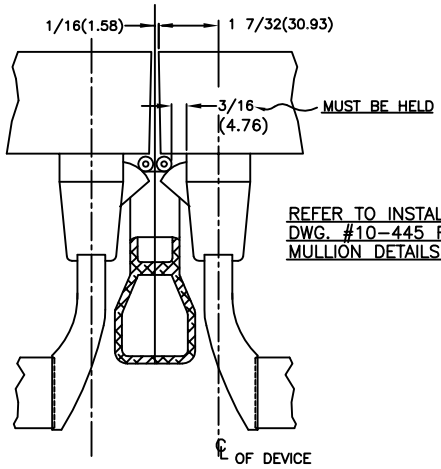

REFER TO INSTALLATION. DWG. #10-445 FOR MULLION DETAILS.

L.H.R.B. SHOWN
R.H.R.B. OPPOSITE

F	3/14/98	REDRAWN	ECN1143	RM

DIMENSIONAL TOLERANCES UNLESS OTHERWISE SPECIFIED	APPROVALS	DATE
DECIMAL DIMENSIONS .XX ± .010	APPROVED	
DECIMAL DIMENSIONS .XXX ± .005	CHECKED	
ANGULAR ± ° FRACTIONAL ± 1/64	DRAWN RM	7/7/97

jackson CORPORATION®
3447 UNION PACIFIC AVE.
LOS ANGELES, CALIF. 90023

FILE NO.	MATERIAL	SCALE NONE	
NEXT ASSY.	FINISH	1095 xWOOD APPLICATION	SHEET 1 OF 1 SHEETS
QTY. USED 1	HEAT TREAT		DWG. NO. 10-482 REV. F

RELEASE FOR PRODUCTION | DATE

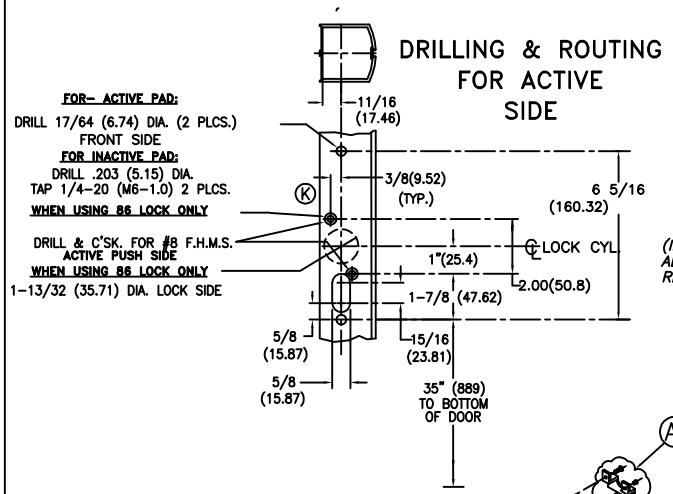

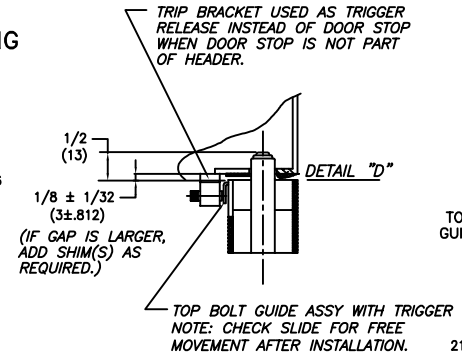

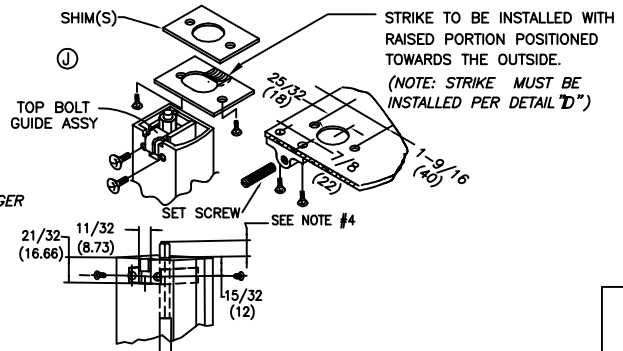

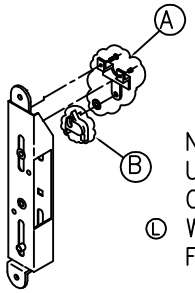

NOTE: WHEN NOT USING MORTISE CYLINDER, PROCEED WITH THE FOLLOWING:

L

1. START BY REMOVING BRACKET (A),
2. NEXT REMOVE DOGGING PAWL (B)
3. FINALIZE BY RE–ATTACHING BRACKET (A)

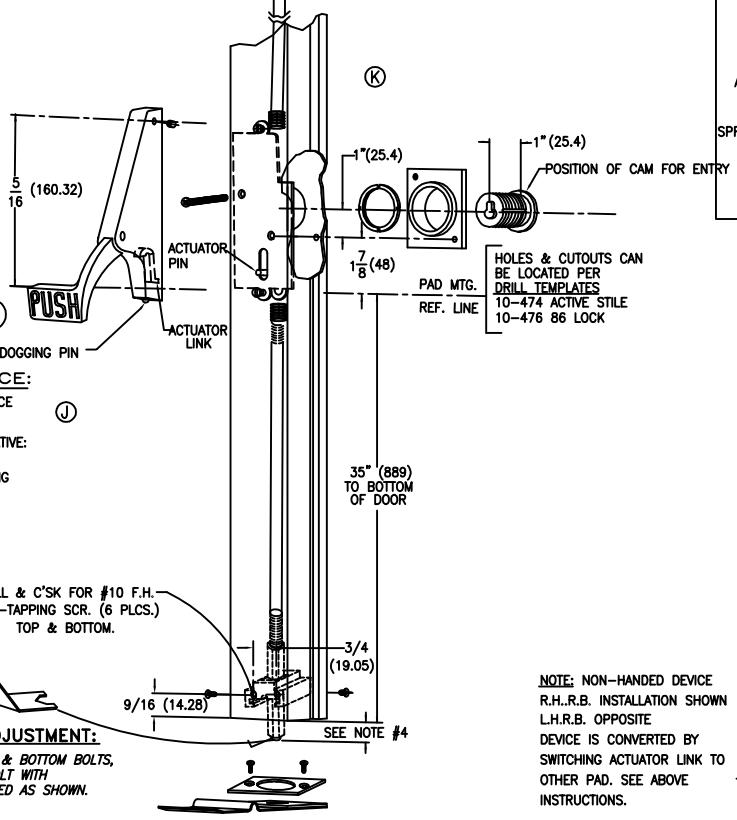

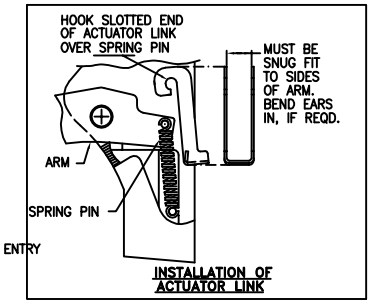

REQUIRED CYLINDER

1" MORTISE WITH CAM PROFILE AS SHOWN BELOW.

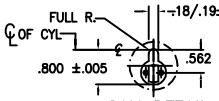

CAM DETAIL

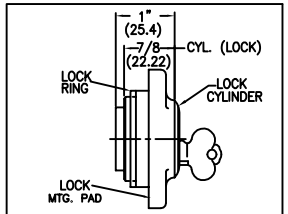

ASSEMBLY VIEW SHOWING LOCK CYL. MTG. PAD & LOCK RING

MODEL 1085P x 86 ONLY

MOUNTING INSTRUCTIONS

1. DETERMINE HAND OF DOOR, THEN PREPARE STILE PER TEMPLATE: 10–474 (DRILL TEMPLATE) FOR ACTIVE STILE.
2. IF LOCK IS TO BE USED, PREPARE ACTIVE STILE PER TEMPLATE 10–476.
3. INSTALL ROD & CASE ASSY INTO ACTIVE STILE AND SECURE WITH TWO 1/4–20 (M6–1.0) SHOULDER STUDS. (IF USING LOCK, PERFORM INST. 5 & 6 NEXT.)
4. PLACE ACTIVE PAD OF STILE MAKING CERTAIN THAT ACTUATOR LINK IS PROPERLY ENGAGED (UNDERSIDE OF PIN) TO MECHANISM AND SECURE PAD. ADJUST BOLTS BY SCREWING IN OR OUT TILL TOP OF BOLT IS FLUSH WITH EDGE OF DOOR, WHEN THE PUSH BAR IS FULLY DEPRESSED. THEN INSTALL BOLT GUIDES WITH SIX #10 x 1/2 F.H. SELF TAPPING SCREWS.
5. INSERT LOCK CYLINDER INTO LOCK MOUNTING PAD AND SECURE WITH LOCK RING PROVIDED. MAKE SURE CYLINDER AND LOCK MOUNTING PAD ARE INSTALLED AS SHOWN. SECURE LOCK PAD WITH 2 EA 8–32 x 1–15/16 FHMS

DOGGING OF DEVICE WITH CYLINDER KEY

TO DOG DEVICE INSERT KEY, FULLY DEPRESS PUSH PAD, HOLD DOWN & TURN KEY CLOCKWISE TO APPROX. TWO O' CLOCK. RETURN KEY TO CENTER FOR REMOVAL.

TO UNDOG TURN KEY COUNTERCLOCKWISE.

DOGGING DEVICE WITH DOGGING PIN

PUSH PUSH PAD DOWN AND HOLD. PUSH DOGGING PIN UP WITH SCREW DRIVER AND TURN 90° TO 180° EITHER DIRECTION, UNTIL DOGGING PIN RELEASES.

NOTE: THIS PRODUCT IS DESIGNED AND MFRG. TO MEET CLASSIFICATION NO. 37601321B, (K) EN179 STANDARD.

RECOMMENDATIONS FOR MAINTENANCE:

J

IT IS RECOMMENDED THAT THE FOLLOWING ROUTINE MAINTENANCE CHECKS SHOULD BE TAKEN AT INTERVALS OF NOT MORE THAN ONE MONTH BY THE OCCUPIER OR HIS APPROVED REPRESENTATIVE:

A) INSPECT AND OPERATE THE PANIC DEVICE TO ENSURE THAT ALL COMPONENTS ARE IN A SATISFACTORY WORKING CONDITION;

B) ENSURE THAT THE KEEPER(S) IS (ARE) FREE FROM OBSTRUCTION.

'THE SAFETY FEATURES OF THIS PRODUCT ARE ESSENTIAL TO IT'S COMPLIANCE WITH EN 179. NO MODIFICATION OF ANY KIND, OTHER THAN THOSE DESCRIBED IN THESE INSTRUCTIONS, ARE PERMITTED'.

BOLT ADJUSTMENT:

TO ADJUST TOP & BOTTOM BOLTS, ROTATE HEX, BOLT WITH WRENCH PROVIDED AS SHOWN.

PATENT NO 3,993,335

NOTE: NON–HANDED DEVICE R.H..R.B. INSTALLATION SHOWN L.H.R.B. OPPOSITE DEVICE IS CONVERTED BY SWITCHING ACTUATOR LINK TO OTHER PAD. SEE ABOVE INSTRUCTIONS.

LH/RHRB SHOWN

L 10.01.05	ADD NOTATION: "WHEN NOT USING MORTISE CLINDER"	ECN1863	RM
K 5.25.05	37601321B WAS 36501321A	ECN1841	RM
J 02/23/00	ADD HUMP TYPE STRIKE	ECN1339	RM
H 2/27/98	ADD MAINT. INSTRUCTIONS	ECN1143	RM
G 10/11/97	REDRAWN, ELIMINATE TOP & BTM HOLE FOR ADJUSMENT (BOLT GUIDE)	ECN1101	RM

DIMENSIONAL TOLERANCES UNLESS OTHERWISE SPECIFIED	APPROVALS	DATE
DECIMAL DIMENSIONS .XX ± .010	APPROVED	
DECIMAL DIMENSIONS .XXX ± .005	CHECKED	
ANGULAR ± ° FRACTIONAL ± 1/64	DRAWN RM	7/7/97

jackson CORPORATION
3447 UNION PACIFIC AVE. LOS ANGELES, CALIF. 90023

FILE NO.	MATERIAL	SCALE NONE	
NEXT ASSY. 31–1085P–KITS	FINISH	INSTALLATION GUIDE 1085P & 1085Px86 PANIC DEVICES	SHEET 1 OF 1 SHEETS
QTY. USED 1	HEAT TREAT		DWG. NO. 10–483 REV. L

RELEASE FOR PRODUCTION	DATE

MOUNTING INSTRUCTIONS

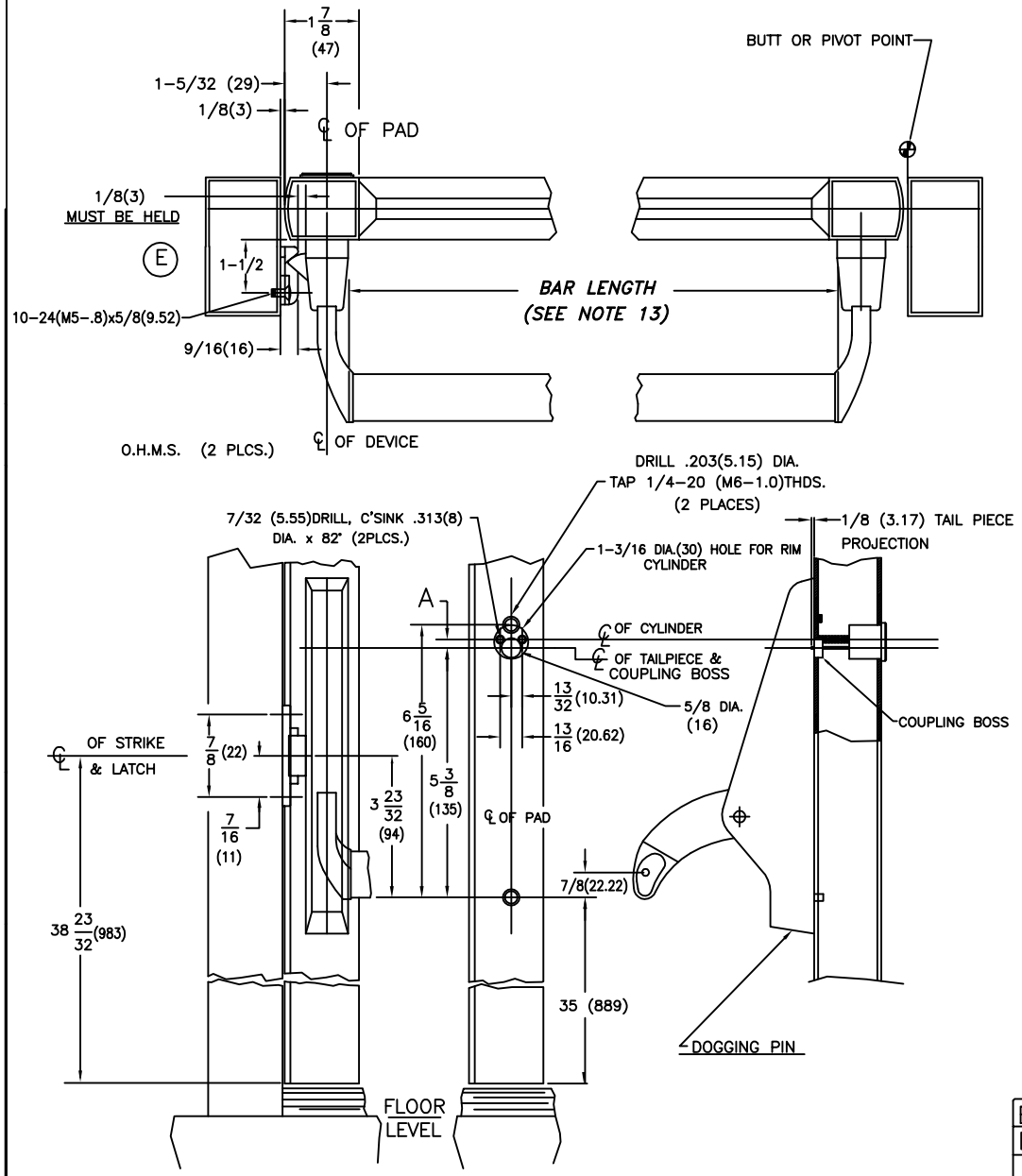

1. DETERMINE HAND OF DOOR AND ESTABLISH CENTER LINE OF PADS ON STILES.
2. PREPARE STILES PER TEMPLATES:
   10-484 TEMPLATE FOR ACTIVE STILE.
   10-475 TEMPLATE FOR INACTIVE STILE.
3. DRILL CYLINDER MOUNTING HOLES ONLY IF REQUIRED
4. LOCATE CENTER LINE OF CYLINDER ON EXTERIOR SIDE OF ACTIVE STILE AND DRILL IF REQUIRED.
5. TRIM TAIL PIECE TO FIT AS SHOWN.
6. MOUNT CYLINDER IN PLACE AND SECURE WITH MOUNTING SCREWS. *(SCREWS MUST BE FLUSH WITH DOOR.)*
7. DETERMINE FUNCTION DESIRED:
   A.) REGULAR FUNCTION KEY REMOVABLE IN EITHER LOCKED OR UNLOCKED POSITION. FULLY RELEASE LATCH THEN SET INDEX MARK ON COUPLING BOSS STRAIGHT UP.
   B.) NIGHT LATCH FUNCTION: KEY REMOVABLE IN LOCKED POSITION ONLY. PREFORM STEP 'A' THEN ROTATE' COUPLING BOSS 90° TOWARDS HINGE SIDE.
8. DRILL .203 (5.15)DIA. AND TAP 1/4-20 THD (4 PLCS.) ON ACTIVE & INACTIVE STILES & INSTALL FOUR (4) 1/4-20(M6-1.0) SHOULDER STUDS. MOUNT ACTIVE PAD TO STILE WITH THREE 1/4-20(M6-1.0)x1/2(12.7) SOC. SET SCREWS.
9. LOCATE AND DRILL MOUNTING HOLES FOR ADJUSTABLE STRIKE. (CENTER ON LATCH)
10. MOUNT AND SECURE STRIKE AS SHOWN.
11. CHECK OPERATION TO ASSURE THAT ALL PARTS AND CYLINDER ARE FUNCTIONING PROPERLY. ADJUST AS REQUIRED.
12. MOUNT INACTIVE PAD TO STILE WITH THREE (3) 1/4-20 (M6-1.0)x 1/2(12.7) SOC. SET SCREWS.
13. CUT LENGTH OF PANIC BAR BY MEASURING FROM INSIDE TO INSIDE EDGE OF MOUNTING PADS. 1/32± (.79) FIT TO SIZE.
14. LOOSEN INACTIVE PAD. INSTALL AND SECURE PANIC BAR WITH TWO 1/4-20(M6-1.0) x 1(25.4) OVAL HD.M.S. (PHIL.) RETIGHTEN PAD SET SCREWS.

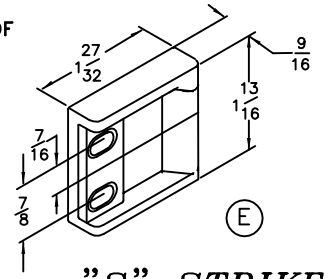

"S" STRIKE

DOGGING INSTRUCTIONS:

TO DOG- DEPRESS CROSS BAR TURN KEY TOWARD LOCK SIDE OR PUSH DOGGING PIN UP AND TURN 90° EITHER DIRECTION.

TO UNDOG- DEPRESS CROSS BAR TURN KEY TOWARD LOCK SIDE OR ROTATE DOGGING PIN UNTIL IT RELEASES.

FUNCTIONAL CYLINDERS	DIM. A
ILCO	1/4(6.35)
LOCKWOOD	
YALE	
CORBIN	
SCHLAGE	
RUSSWIN	
WELCH	
KEIL	
SARGENT	3/8(9.52)

E	6.27.03	PICTORIAL SHOWING ROLLER-LESS "S" STRIKE SHOWN	ECN1625	RM
D	6/11/98	REDRAWN	ECN1143	RM

DIMENSIONAL TOLERANCES UNLESS OTHERWISE SPECIFIED	APPROVALS	DATE
DECIMAL DIMENSIONS .XX ± .010	APPROVED	
DECIMAL DIMENSIONS .XXX ± .005	CHECKED	
ANGULAR ± X ° FRACTIONAL ± 1/64	DRAWN RM	6/28/97
	SCALE NONE	

FILE NO.	MATERIAL	
NEXT ASSY. 1095-KITS	FINISH	
QTY. USED 1	HEAT TREAT	

INSTLLATION GUIDE 1095
RIM PANIC DEVICE FOR
OFFSET PIVOT x "S" STRIKE

jackson CORPORATION®
3447 UNION PACIFIC AVE.
LOS ANGELES, CALIF. 90023

SHEET 1 OF 1 SHEETS

DWG. NO. 10-499 REV. E

RELEASE FOR PRODUCTION	DATE

MOUNTING INSTRUCTIONS

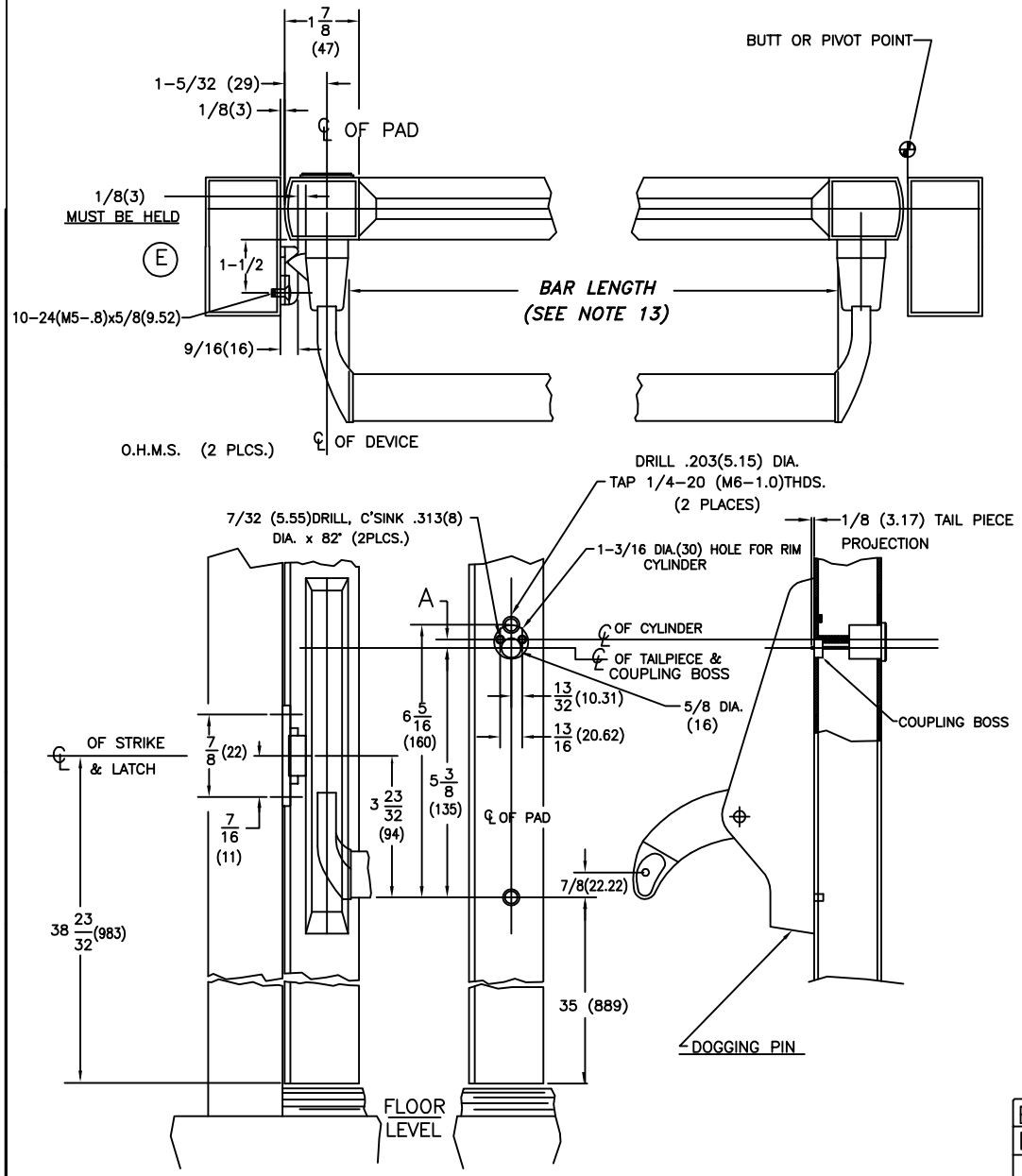

1. DETERMINE HAND OF DOOR AND ESTABLISH CENTER LINE OF PADS ON STILES.
2. PREPARE STILES PER TEMPLATES:
   10-484 TEMPLATE FOR ACTIVE STILE.
   10-475 TEMPLATE FOR INACTIVE STILE.
3. DRILL CYLINDER MOUNTING HOLES ONLY IF REQUIRED
4. LOCATE CENTER LINE OF CYLINDER ON EXTERIOR SIDE OF ACTIVE STILE AND DRILL IF REQUIRED.
5. TRIM TAIL PIECE TO FIT AS SHOWN.
6. MOUNT CYLINDER IN PLACE AND SECURE WITH MOUNTING SCREWS. *(SCREWS MUST BE FLUSH WITH DOOR.)*
7. DETERMINE FUNCTION DESIRED:
   A.) REGULAR FUNCTION KEY REMOVABLE IN EITHER LOCKED OR UNLOCKED POSITION. FULLY RELEASE LATCH THEN SET INDEX MARK ON COUPLING BOSS STRAIGHT UP.
   B.) NIGHT LATCH FUNCTION: KEY REMOVABLE IN LOCKED POSITION ONLY. PREFORM STEP 'A' THEN ROTATE' COUPLING BOSS 90° TOWARDS HINGE SIDE.
8. DRILL .203 (5.15)DIA. AND TAP 1/4-20 THD (4 PLCS.) ON ACTIVE & INACTIVE STILES & INSTALL FOUR (4) 1/4-20(M6-1.0) SHOULDER STUDS. MOUNT ACTIVE PAD TO STILE WITH THREE 1/4-20(M6-1.0)x1/2(12.7) SOC. SET SCREWS.
9. LOCATE AND DRILL MOUNTING HOLES FOR ADJUSTABLE STRIKE. (CENTER ON LATCH)
10. MOUNT AND SECURE STRIKE AS SHOWN.
11. CHECK OPERATION TO ASSURE THAT ALL PARTS AND CYLINDER ARE FUNCTIONING PROPERLY. ADJUST AS REQUIRED.
12. MOUNT INACTIVE PAD TO STILE WITH THREE (3) 1/4-20 (M6-1.0)x 1/2(12.7) SOC. SET SCREWS.
13. CUT LENGTH OF PANIC BAR BY MEASURING FROM INSIDE TO INSIDE EDGE OF MOUNTING PADS. 1/32± (.79) FIT TO SIZE.
14. LOOSEN INACTIVE PAD. INSTALL AND SECURE PANIC BAR WITH TWO 1/4-20(M6-1.0) x 1(25.4) OVAL HD.M.S. (PHIL.) RETIGHTEN PAD SET SCREWS.

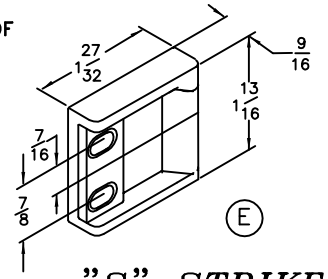

"S" STRIKE

DOGGING INSTRUCTIONS:

TO DOG- DEPRESS CROSS BAR TURN KEY TOWARD LOCK SIDE OR PUSH DOGGING PIN UP AND TURN 90° EITHER DIRECTION.

TO UNDOG- DEPRESS CROSS BAR TURN KEY TOWARD LOCK SIDE OR ROTATE DOGGING PIN UNTIL IT RELEASES.

FUNCTIONAL CYLINDERS	DIM. A
ILCO	1/4(6.35)
LOCKWOOD	
YALE	
CORBIN	
SCHLAGE	
RUSSWIN	
WELCH	
KEIL	
SARGENT	3/8(9.52)

E	6.27.03	PICTORIAL SHOWING ROLLER-LESS "S" STRIKE SHOWN	ECN1625	RM
D	6/11/98	REDRAWN	ECN1143	RM

DIMENSIONAL TOLERANCES UNLESS OTHERWISE SPECIFIED	APPROVALS	DATE
DECIMAL DIMENSIONS .XX ± .010	APPROVED	
DECIMAL DIMENSIONS .XXX ± .005	CHECKED	
ANGULAR ± X ° FRACTIONAL ± 1/64	DRAWN RM	6/28/97
	SCALE NONE	

FILE NO.	MATERIAL	
NEXT ASSY. 1095-KITS	FINISH	
QTY. USED 1	HEAT TREAT	

INSTLLATION GUIDE 1095
RIM PANIC DEVICE FOR
OFFSET PIVOT x "S" STRIKE

jackson CORPORATION®
3447 UNION PACIFIC AVE.
LOS ANGELES, CALIF. 90023

SHEET 1 OF 1 SHEETS

DWG. NO. 10-499 REV. E

RELEASE FOR PRODUCTION	DATE

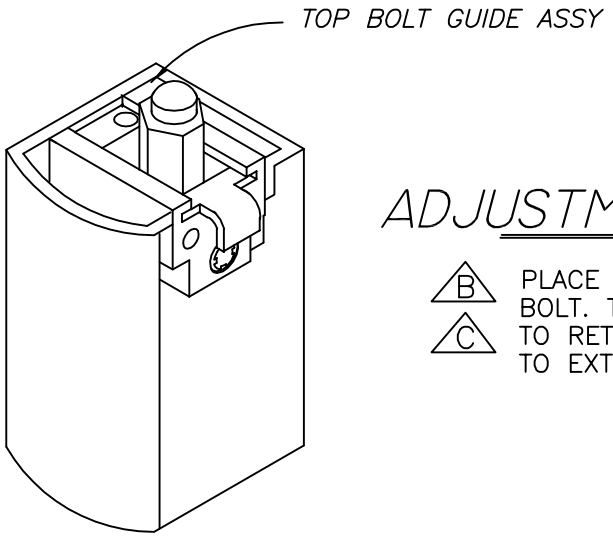

USAGE: 1085,2085,2086,
△D 3185B&3186,1285,1206

ADJUSTMENT INSTRUCTIONS.

△B PLACE ADJUSTMENT WRENCH ONTO BOLT. TURN WRENCH CLOCKWISE
△C TO RETRACT BOLT–COUNTERCLOCKWISE TO EXTEND BOLT.

NOTE:
TOP BOLT GUIDE ASSY USED WITH THE FOLLOWING:

1085,1285,1206,2086 & 3186

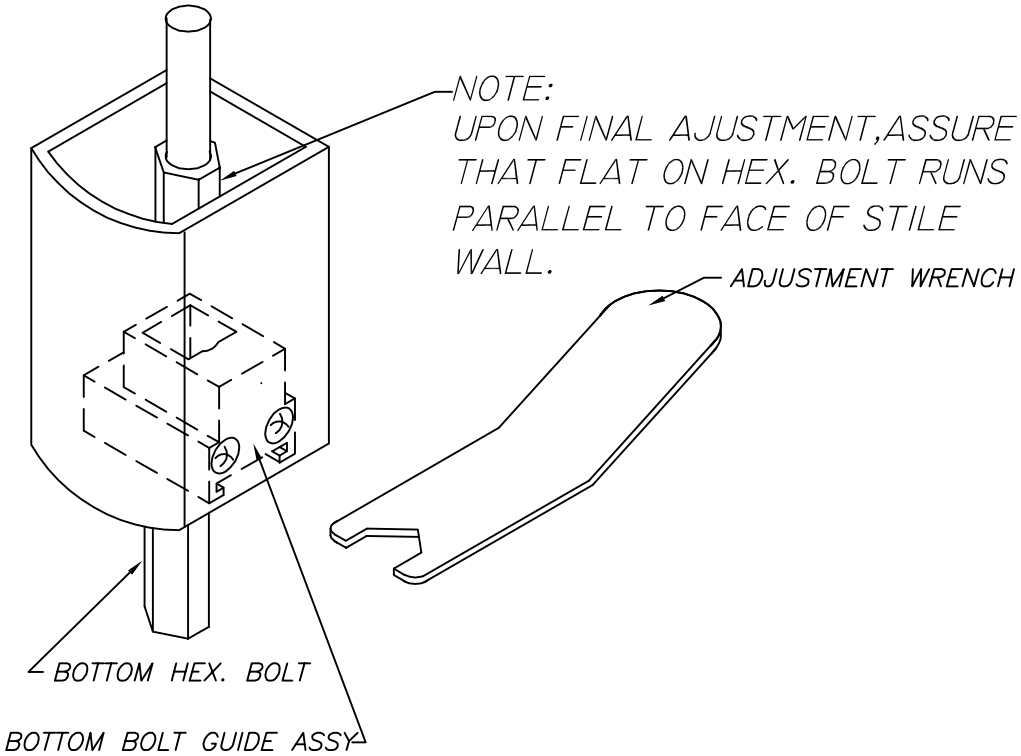

D	11.05.05	UPDATE MODEL USAGE: ADD 1285	ECN1873 RM
C	11/3/97	REVISE ADJ. INSTRUCTIONS	ECN1116 RM
B	1/5/95	REVISE ADJ. INSTRUCTIONS	ECN982 RM

DIMENSIONAL TOLERANCES UNLESS OTHERWISE SPECIFIED
DECIMAL DIMENSIONS .XX ± .010
DECIMAL DIMENSIONS .XXX ± .005
ANGULAR ± ° FRACTIONAL ± 1/64

APPROVALS		DATE
APPROVED		
CHECKED		
DRAWN	R.M.	11/4/95

SCALE NONE

jackson CORPORATION®
3447 UNION PACIFIC AVE.
LOS ANGELES, CALIF. 90023

FILE NO.	MATERIAL	
NEXT ASSY.	FINISH	
QTY. USED 1	HEAT TREAT	

ADJUSTMENT INSTRUCTIONS
TOP & BTM BOLT GUIDE ASSY

SHEET 1 OF 1 SHEETS
DWG. NO. 10–860
REV. D

RELEASE FOR PRODUCTION	DATE

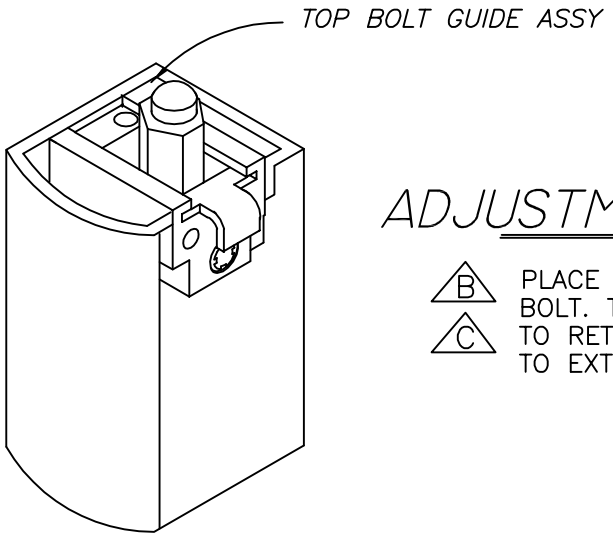

USAGE: 1085,2085,2086,
△D 3185B&3186,1285,1206

ADJUSTMENT INSTRUCTIONS.

△B PLACE ADJUSTMENT WRENCH ONTO BOLT. TURN WRENCH CLOCKWISE
△C TO RETRACT BOLT–COUNTERCLOCKWISE TO EXTEND BOLT.

NOTE:
TOP BOLT GUIDE ASSY USED WITH THE FOLLOWING:

1085,1285,1206,2086 & 3186

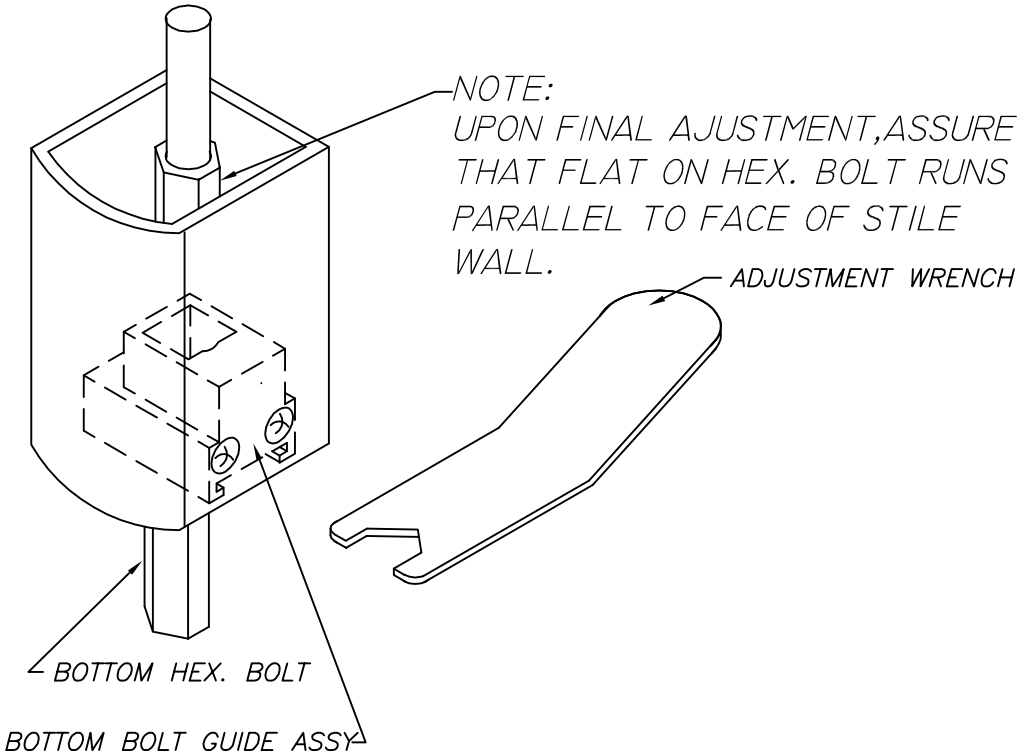

D	11.05.05	UPDATE MODEL USAGE: ADD 1285	ECN1873 RM
C	11/3/97	REVISE ADJ. INSTRUCTIONS	ECN1116 RM
B	1/5/95	REVISE ADJ. INSTRUCTIONS	ECN982 RM

DIMENSIONAL TOLERANCES UNLESS OTHERWISE SPECIFIED
DECIMAL DIMENSIONS .XX ± .010
DECIMAL DIMENSIONS .XXX ± .005
ANGULAR ± ° FRACTIONAL ± 1/64

APPROVALS		DATE
APPROVED		
CHECKED		
DRAWN	R.M.	11/4/95

SCALE NONE

jackson CORPORATION®
3447 UNION PACIFIC AVE.
LOS ANGELES, CALIF. 90023

FILE NO.	MATERIAL	
NEXT ASSY.	FINISH	
QTY. USED 1	HEAT TREAT	

ADJUSTMENT INSTRUCTIONS
TOP & BTM BOLT GUIDE ASSY

SHEET 1 OF 1 SHEETS
DWG. NO. 10–860
REV. D